INGLETEADORA 10" 255 MM 1600 WATTS

Parte: **Ingleteadora**

Código 382937 Modelo TKMS-10

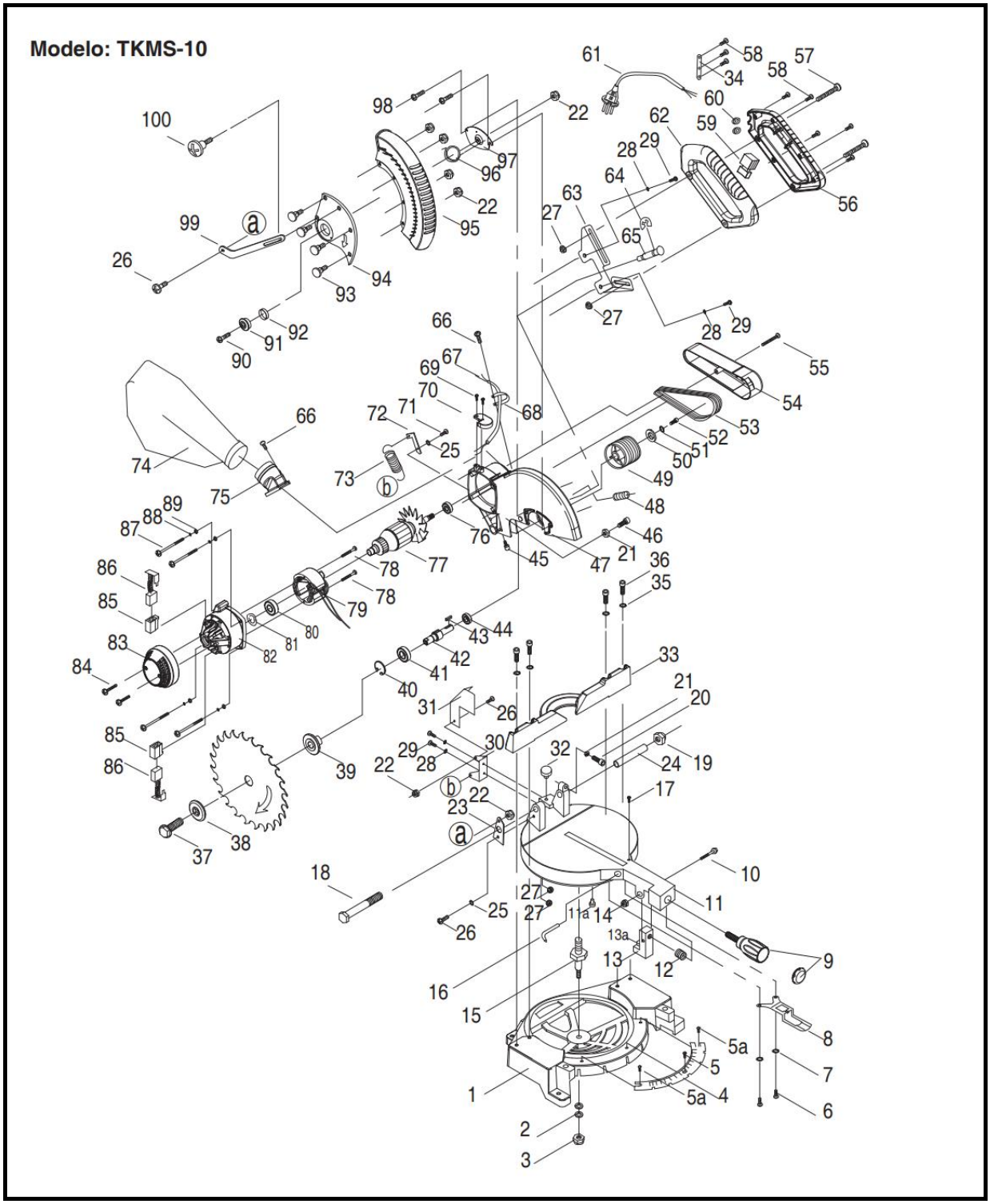

INGLETEADORA 10" 255 MM 1600 WATTS

Parte: **Ingleteadora**

Código 382937 Modelo TKMS-10

N°	Cód. Savake	Descripción Español	Descripción Ingles	Cant.	Observaciones
1			Base		
2			Flat washer Ø8		
3			Nut M8		
4			Scale ruler		
5			Screw M5x12		
6			Screw M5x12		
7			Spring washer Ø5		
8			Spring plate		
9			Round plate		
10			Bolt M6x35		
11			Round plate		
12			Spring		
13			L shap square		
14			Nut M6		
15			Screw		
16			Pointer		
17			Screw		
18			Bolt M12x100		
19			Nut M12		
20			Screw M8x35		
21			Nut M8		
22			Nut M5		
23			Fix plate		
24			Pin Ø18x81		
25			Spring washer Ø5		
26			Screw M5x10		
27			Nut M6		
28			Spring washer Ø6		
29			Screw M6x16		
30			Spring support		
31			Limit plate		
32			Rubber gasket		
33			Apron		
34			Cord clamp		
35			Spring washer Ø8		
36			Screw M8x40		
37			Bolt M8x16		
38			Outer flange		
39			Inner flange		
40			Collar		
41			Bearing 6203		
42			Output shaft		
43			Pin 5x20		

INGLETEADORA 10" 255 MM 1600 WATTS

Parte: **Ingleteadora**

Código 382937 Modelo TKMS-10

N°	Cód. Savake	Descripción Español	Descripción Ingles	Cant.	Observaciones
44			Bearing 6202		
45			Screw M6x12		
46			Screw M8x20		
47			Blade cover		
48			Spring		
49			Pulley		
50			Washer 6x25x3		
51			Spring washer Ø6		
52			Screw M6x20		
53			Belt		
54			Belt cover		
55			Screw M5x43		
56			Right handle		
57			Screw M6x40		
58			Screw ST4x14		
59	391128	SWITCH DE ENCENDIDO P/TKMS-10	Switch		
60			Rubber ring		
61			Power cord		
62			Left handle		
63			Handle seat		
64			Snap ring		
65			Self lock pin		
66			Screw M5x6		
67			Cord for laser		
68			Cord clamp		
69			Screw M4x10		
70			Cord press cover		
71			Screw M5x12		
72			Spring hook		
73			Spring		
74			Dust bag		
75			Dust collect tube		
76			Bearing 6202		
77	391078	INDUCIDO P/TKMS-10	Armature		
78			Screw ST4.8x60		
79	391102	CAMPO P/TKMS-10	Stator		

INGLETEADORA 10" 255 MM 1600 WATTS

Parte: **Ingleteadora**

Código 382937 Modelo TKMS-10

N°	Cód. Savake	Descripción Español	Descripción Ingles	Cant.	Observaciones
80			Bearing 6200		
81			Wave washer Ø30xØ26		
82			Motor housing		
83			Rear cap		
84			Screw ST4x18		
85			Carbon brush holder		
86	391136	CARBONES P/TKMS-10	Carbon brush		
87			Screw M5x20		
88			Spring washer Ø5		
89			Flat washer Ø5		
90			Screw M5x12		
91			Rotate block		
92			Plastic ring		
93			Screw M5		
94			Guard cover		
95			Wheel guard		
96			Wheel guard		
97			Cover base		
98			Screw M5x6		
99			Connect bar		
100			Connect bar		
5a			Ball screw M5x12		
11a			Plastic particle		
13a			Gasket		